SPECIFICATION SHEET

Models CDTM, CETM, CFTM
Widebody™ Linear Diffuser
T-bar Lay In

Imperial [IP] Dimensions
Metric (SI) in Parentheses

CARNES COMPANY 448 S. Main St., P. O. Box 930040, Verona, WI 53593-0040 Phone: (608)845-6411 Fax: (608)845-6504 www.carnes.com

Model CE
(High Bay Deflector)
1 or 2-Slot

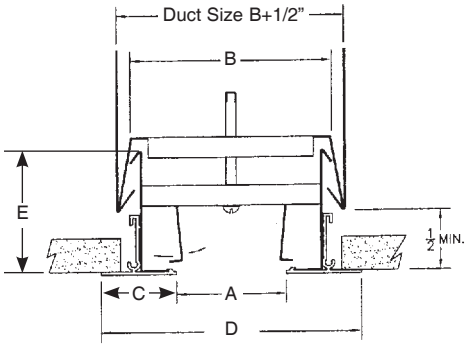

Model CD
(Standard Deflector)
1 or 2-Slot

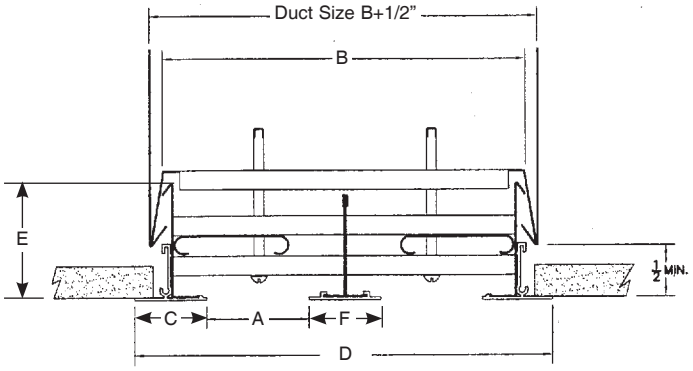

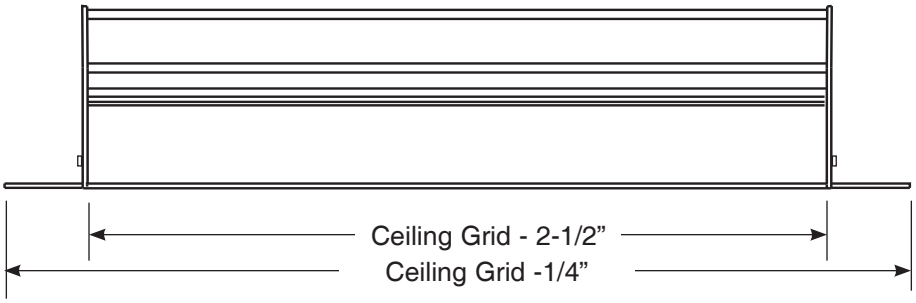

Notes:
- Construction is extruded aluminum.
- Standard finish is #37 Bright White Face with Flat Black Interior.
- Units are straight as standard. They can be curved on request.
- Maximum single panel length is 96" (2438).
- Minimum length is 12" (305).
- Metric dimensions are in millimeters.
- This is the surface mount diffuser sized to fit into t-bar ceiling.
- To get proper length, specify a nominal length 2-1/2" shorter than the t-bar grid size.

		1-Slot Slot Width (A)					2-Slot Slot Width (A)				
Dim.	**Description**	**1"**	**1-1/2"**	**2"**	**2-1/2"**	**3"**	**1"**	**1-1/2"**	**2"**	**2-1/2"**	**3"**
B	Neck O.D.	2-5/8" (67)	3-1/8" (79)	3-5/8" (92)	5-1/2" (140)	6" (153)	5-1/8" (130)	6-1/8" (156)	7-1/8" (181)	10-5/8" (270)	11-5/8" (295)
C	Flange Width	1-3/8" (35)	1-3/8" (35)	1-3/8" (35)	2-1/16" (52)	2-1/16" (52)	1-3/8" (35)	1-3/8" (35)	1-3/8" (35)	2-1/16" (52)	2-1/16" (52)
D	Face O.D.	3-3/4" (95)	4-1/4" (108)	4-3/4" (121)	6-5/8" (168)	7-1/8" (181)	6-1/8" (165)	7-1/8" (181)	8-1/8" (206)	11-3/4" (298)	12-3/4" (324)
E	Unit Height	2-1/4" (57)	2-1/4" (57)	2-1/4" (57)	3" (76)	3" (76)	2-1/4" (57)	2-1/4" (57)	2-1/4" (57)	3" (76)	3" (76)
F	Center Flange	- - -	- - -	- - -	- - -	- - -	1-3/8" (35)	1-3/8" (35)	1-3/8" (35)	2-5/8" (67)	2-5/8" (67)

COPYRIGHT © 2019 CARNES COMPANY
ALL RIGHTS RESERVED